GIGALOG

Analog-to-Digital Converter
10bit, 10GSps
GADC10B10

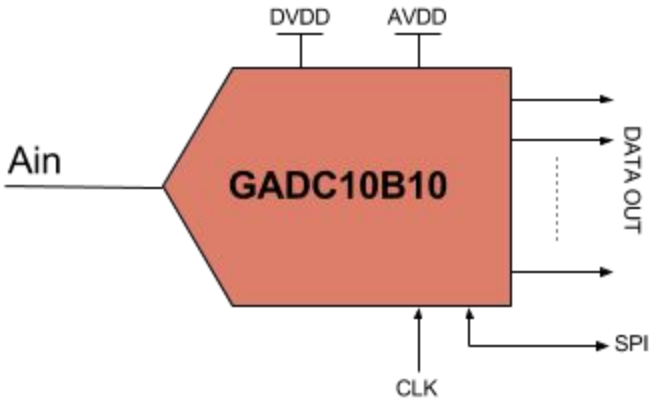

KEY SPECIFICATIONS

- ENOB @ 4GHz: 8bit
- Max Conversion Rate: **10GSps**
- SNR @ 4GHz: 50dBFS
- Full Power Bandwidth: **15GHz**
- Ultra Low Power

APPLICATIONS

- Digital Oscilloscopes
- Digitizers
- Instrumentations
- Test Equipment
- Communication

DC SPECIFICATIONS

Parameter	Condition	MIN	TYP	MAX	UNIT
Resolution			10		bit
Sample Rate			10		GSps
Accuracy			8		Enobs
No Missing Codes			0		
Offset Error			2		LSB
Gain Error			tbd		LSB
DNL			+-0.8		LSB
INL			+-1		LSB
Temperature Drift					
Offset Error			tbd		ppm/°C
Gain Error			tbd		ppm/°C
Analog Input					
Differential Input Voltage Range			+/-150		mV
Common-Mode Voltage			0.2		V
Diff. Input Capacitance			0.15		pF
Power Supply					
AVDD			0.9		V
DVDD			0.9		V
I_AVDD			*NDA		mA
I_DVDD			*NDA		mA
Total Power Consumption			*NDA		W

*NDA - NDA is needed in order to see the data.

All rights reserved to Gigalog LTD

AC SPECIFICATIONS

Parameter	Condition	MIN	TYP	MAX	UNIT
Analog Input Full Scale			300		mV p-p
Noise Density			tbd		dBFS/Hz
SNR					
fIN = 10 MHz			55		dBFS
fIN = 100 MHz			54		dBFS
fIN = 500 MHz			52		dBFS
fIN = 1 GHz			52		dBFS
fIN = 2 GHz			50		dBFS
fIN = 4 GHz			50		dBFS
SINAD					
fIN = 10 MHz			50		dBFS
fIN = 100 MHz			50		dBFS
fIN = 500 MHz			50		dBFS
fIN = 1 GHz			50		dBFS
fIN = 2 GHz			50		dBFS
fIN = 4 GHz			49.92		dBFS
ENOB					
fIN = 10 MHz			8.2		Bits
fIN = 100 MHz			8.2		Bits
fIN = 500 MHz			8		Bits
fIN = 1 GHz			8		Bits
fIN = 2 GHz			8		Bits
fIN = 4 GHz			8		Bits

All rights reserved to Gigalog LTD

Parameter	Condition	MIN	TYP	MAX	UNIT
SFDR					
fIN = 10 MHz					dBFS
fIN = 100 MHz					dBFS
fIN = 500 MHz					dBFS
fIN = 1 GHz					dBFS
fIN = 2 GHz			54		dBFS
fIN = 4 GHz			54		dBFS
Full Power BW			15		GHz

All rights reserved to Gigalog LTD